OLFA®
THE ORIGINATOR SINCE 1956

CHANGING BLADE INSTRUCTIONS

For Safety Knife Model: SK-12

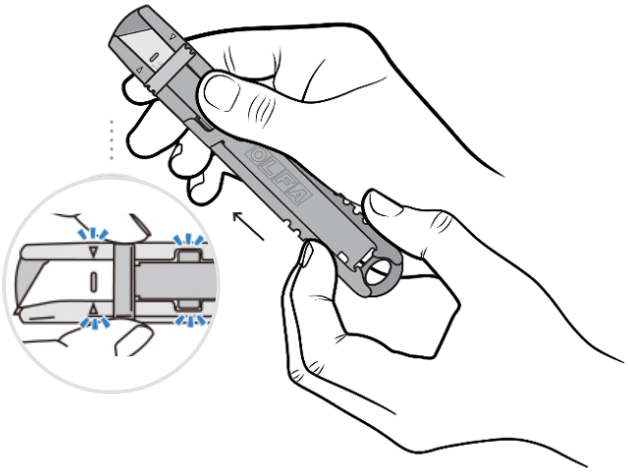

1 Push slider forward until arrows on handle align to notches on blade.

2 Lift slider assembly.

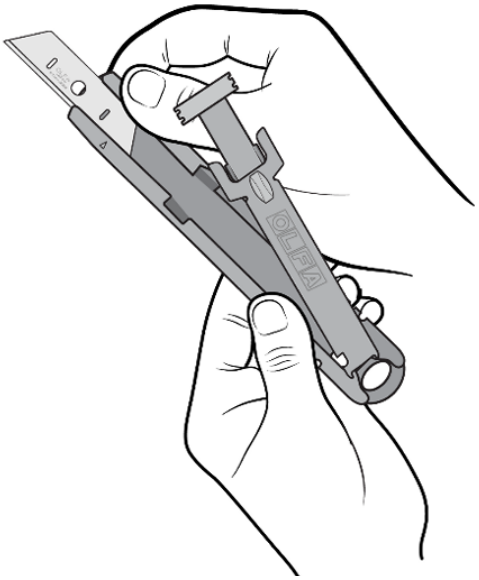

3 Carefully remove used blade. Flip end-to-end for new edge or rotate 180° for left-handed use. Dispose of fully used blade properly in sharps container.

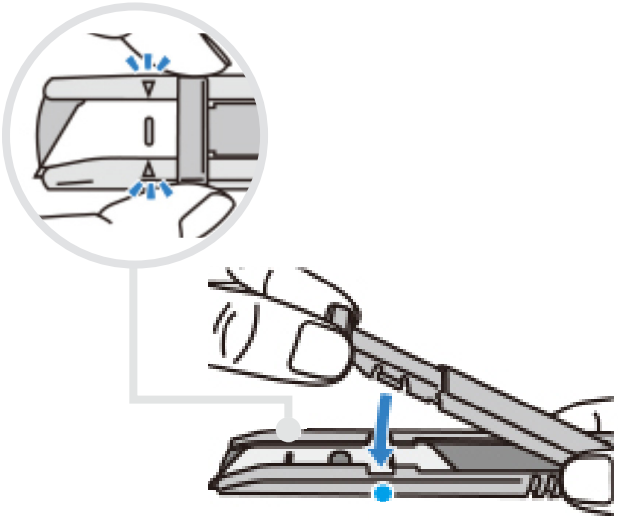

4 Carefully insert blade into channel. Center top notch in blade with arrows on handle.

OLFA®
THE ORIGINATOR SINCE 1956

CHANGING BLADE INSTRUCTIONS

For Safety Knife Model: SK-12

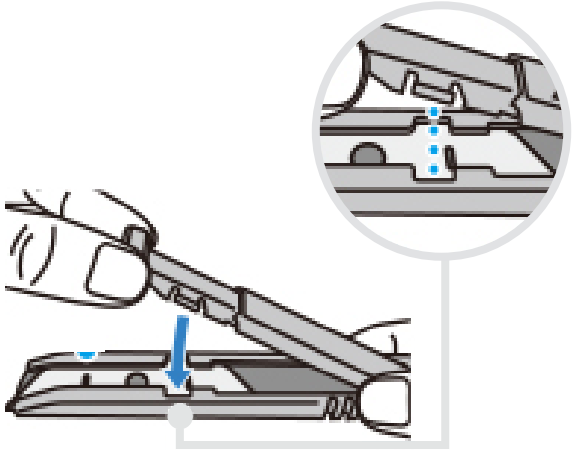

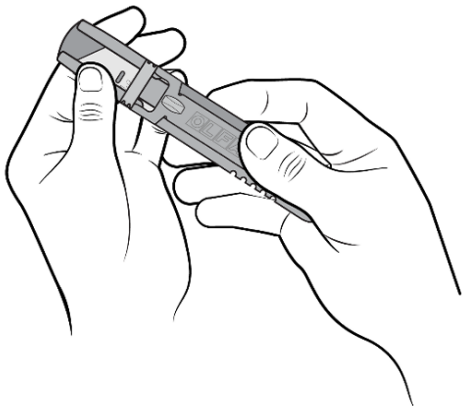

5 Lift and slightly pull slider forward to align the wings with the channel opening. Close slider assembly.

6 New blade is now ready for use.
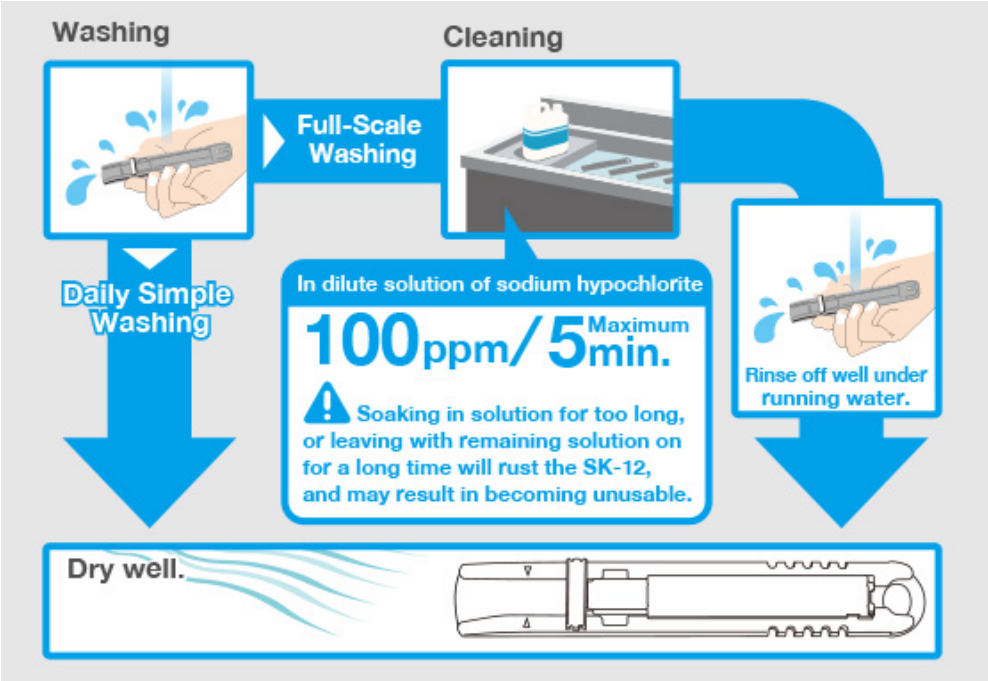
CLEANING INSTRUCTIONS